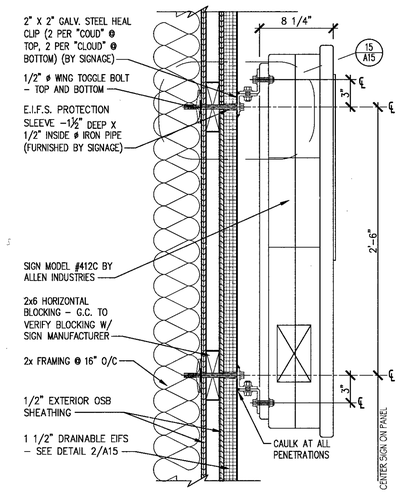

WALL SIGN AT ENTRIES | SCALE: 1 1/2"=1'-0" | 18

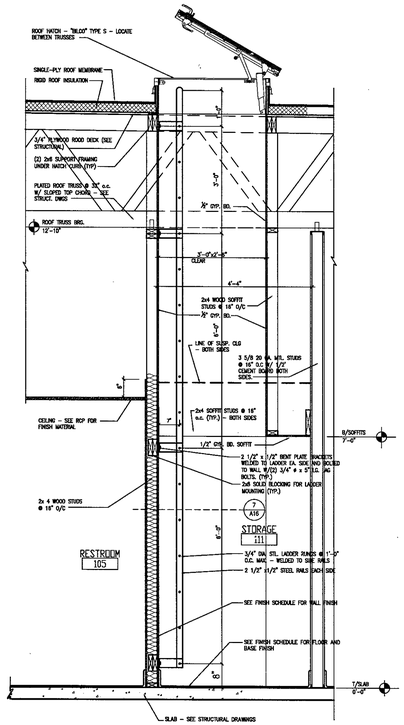

ROOF LADDER SECTION | SCALE: 3/4"=1'-0" | 14

NOT USED | SCALE: 1 1/2" = 1'-0" | 10

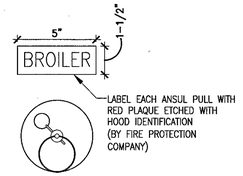

ANSUL PULL LABELS

TYPICAL ANSIL PULL STATION | SCALE: 3/4"=1'-0" | 5

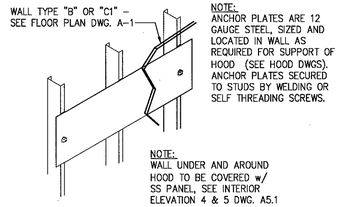

METAL STUD WALL BLOCKING | SCALE: 3/4"=1'-0" | 1

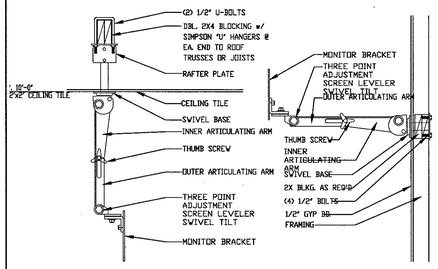

CEILING MONITOR SUPPORT | SCALE: 3"=1'-0" | 6

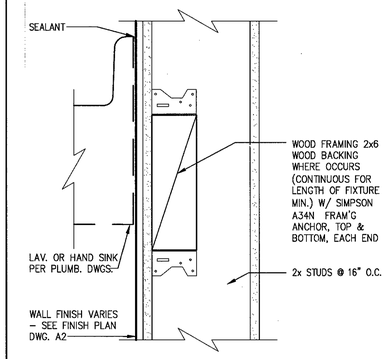

SINK SUPPORT BLOCKING | SCALE: NTS | 2

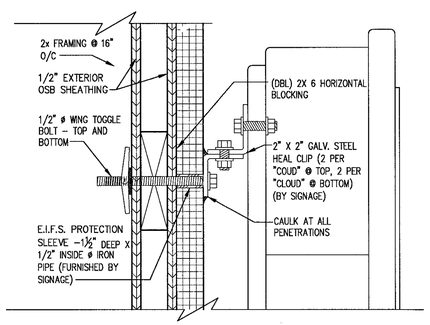

TYPICAL SIGN ATTACHMENT | SCALE: 3"=1'-0" | 19

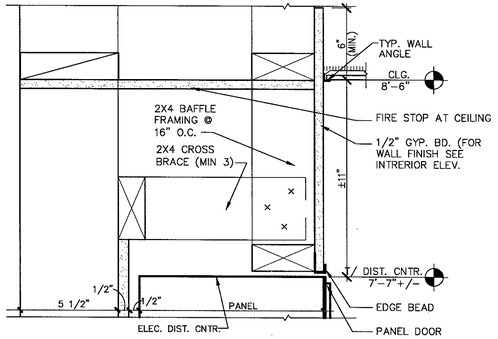

ELEC. DISTRBUTION CENTER HEAD | SCALE: 3"=1'-0" | 15

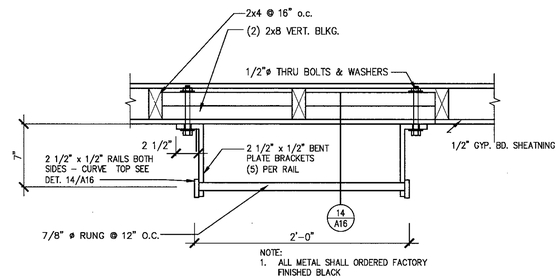

EXTERIOR LADDER | SCALE: 1 1/2"=1'-0" | 7

NOT USED | SCALE: 3"=1'-0" | 3

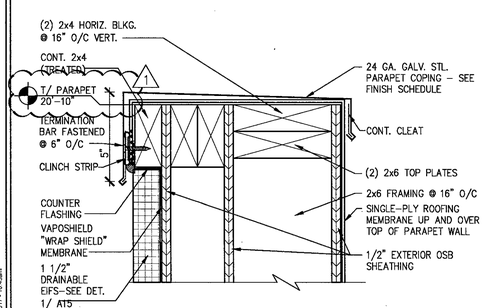

PARAPET COPING @ E.I.F.S. | SCALE: 3"=1'-0" | 20

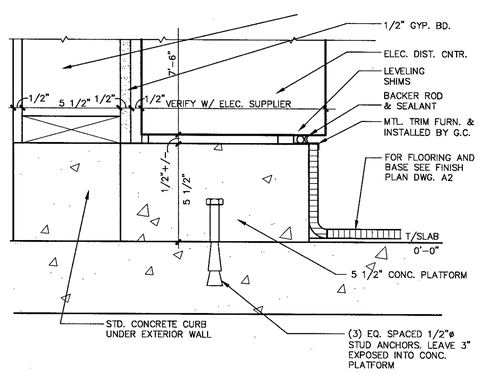

ELEC. DISTRBUTION CENTER BASE | SCALE: 3"=1'-0" | 16

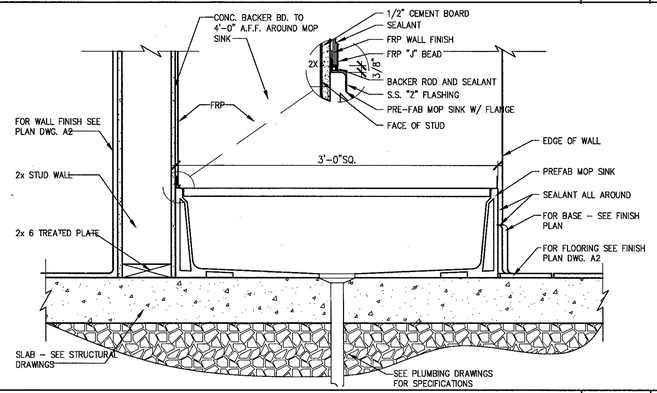

MOP SINK | SCALE: 3/4"=1'-0" | 8

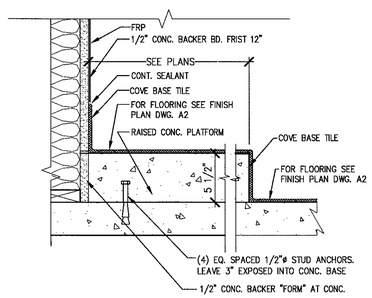

RAISED CONCRETE PLATFORM @ H2O HEATER | SCALE: NTS | 4

NRD Project # 16432

national restaurant designers
ARCHITECTS & ENGINEERS
3005 Carrington Mill Blvd. Suite 150,
Morrisville NC 27560
ph: 919 544 7251 fax: 919 544 9399
A Division of LMHT Associates

STATE OF GEORGIA ★ GLEN LEITMANN ★ REGISTERED ARCHITECT

JAN. 31, 2015

HARDEE'S H24-66 PROTOTYPE
U.S. HWY. 441 BUS.
CORNELIA, GEORGIA 30531

REVISIONS

NO.	DESCRIPTION	DATE
1	CITY COMMENTS	3-18-17

DETAILS

DRAWN BY: | CHECKED BY #1: | CHECKED BY #2: | APPROVED BY:

CKE SITE ID.:

DATE: 02/01/2017

SHEET NUMBER:

A16

A-16B1.dwg Mar 10, 2017 - 10:43am