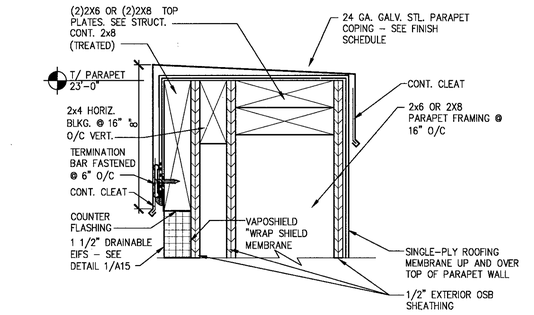

PARAPET COPING @ TOWER — SCALE: 3"=1'-0" — 13

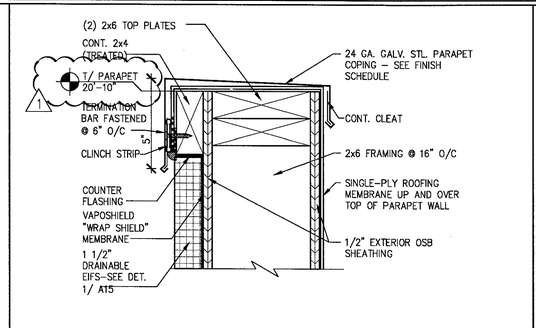

PARAPET COPING @ E.I.F.S. — SCALE: 3"=1'-0" — 9

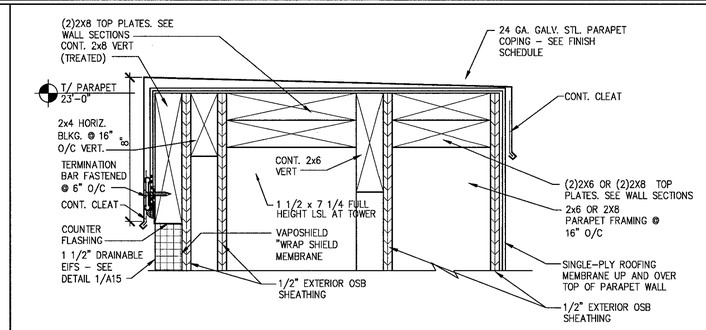

TOWER PARAPET COPING — SCALE: 3"=1'-0" — 5

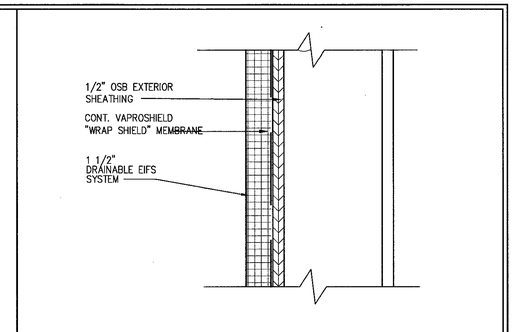

TYPICAL E.I.F.S. SYSTEM — SCALE: 3"=1'-0" — 1

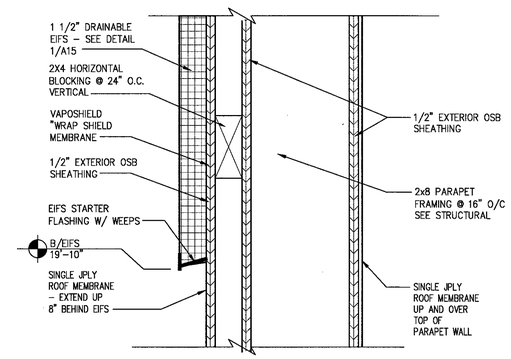

TOWER WING WALL — SCALE: 3"=1'-0" — 14

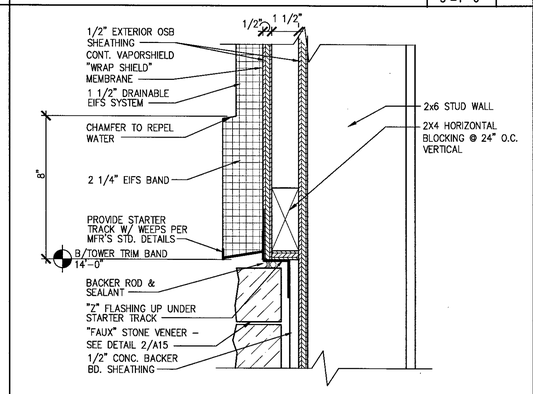

TOWER TRIM BAND — SCALE: 3"=1'-0" — 10

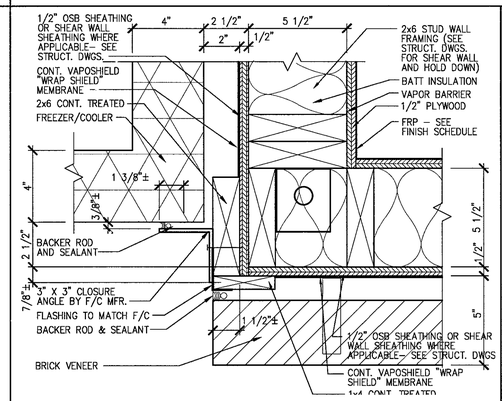

FREEZER/COOLER AT WALL PLAN DETAIL — SCALE: 3"=1'-0" — 6

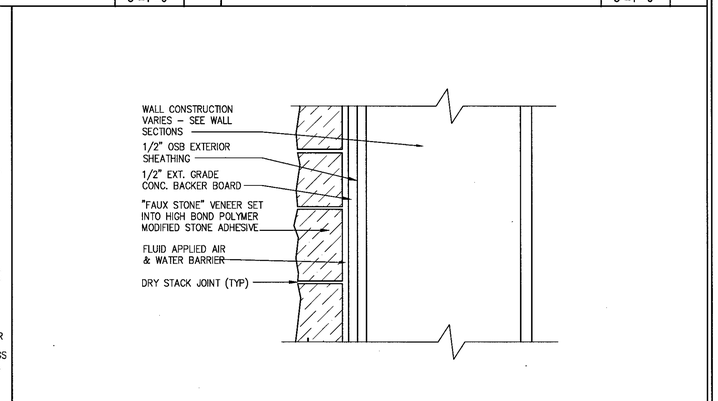

TYPICAL "FAUX" STONE SYSTEM — SCALE: NTS — 2

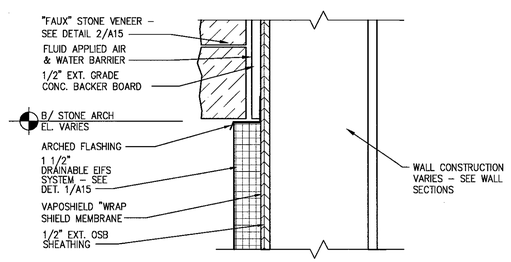

NOTE: SEE EXTERIOR ELEVATIONS FOR ARCH DIMENSIONS.

"FAUX" STONE ENTRY ARCH — SCALE: 3"=1'-0" — 15

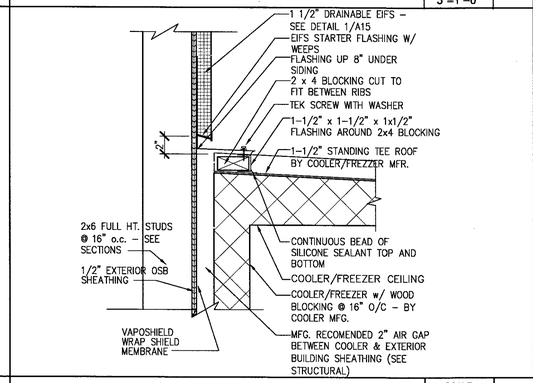

FREEZER/COOLER ROOF DETAIL — SCALE: 1 1/2"=1'-0" — 11

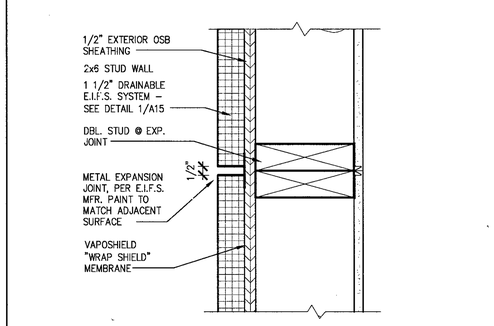

E.I.F.S. EXPANSION JOINT — SCALE: 3"=1'-0" — 7

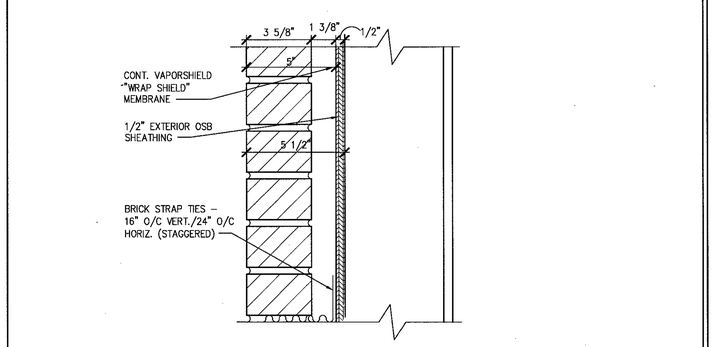

TYPICAL BRICK VENEER SYSTEM — SCALE: 3"=1'-0" — 3

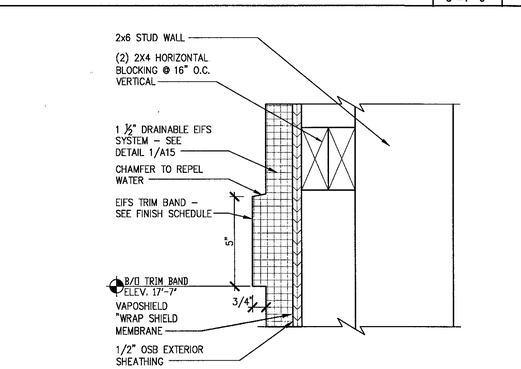

5" E.I.F.S. TRIM BAND — SCALE: 3"=1'-0" — 16

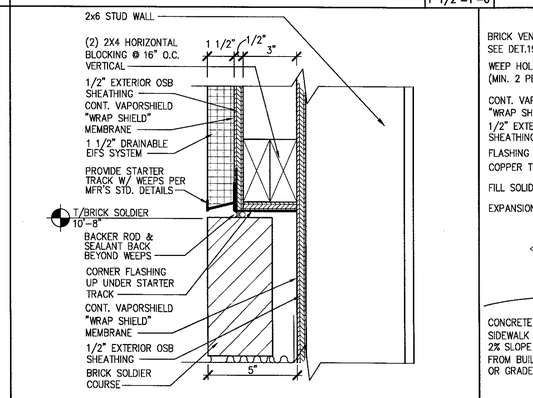

BRICK/EIFS TRANSITION — SCALE: 3"=1'-0" — 12

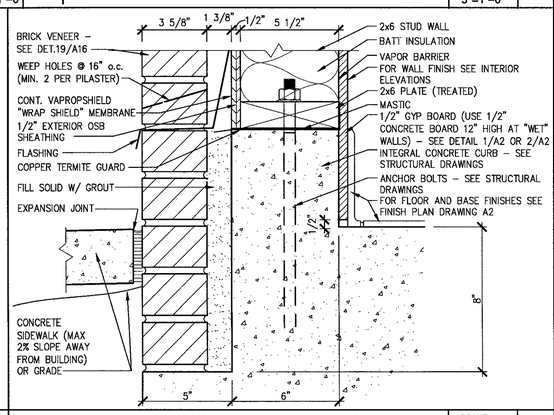

E.I.F.S. BASE — SCALE: 3"=1'-0" — 8

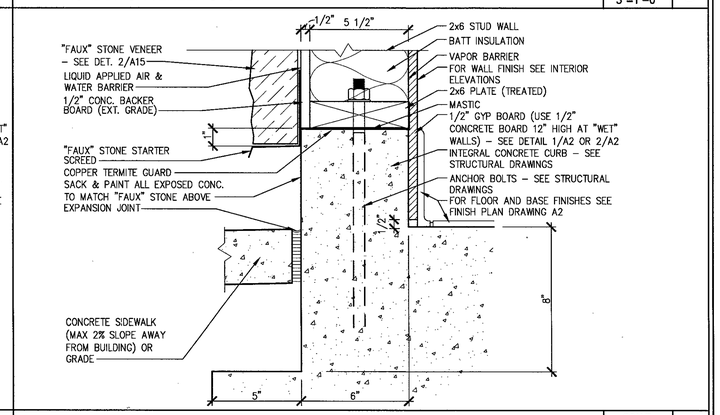

"FAUX" STONE BASE — SCALE: 3"=1'-0" — 4

A15R1.dwg Mar 10, 2017 - 10:43am

NRD Project # 16432

NRD national restaurant designers
ARCHITECTS & ENGINEERS
3005 Carrington Mill Blvd. Suite 150,
Morrisville NC 27560
ph: 919 544 7251 fax: 919 544 9399
A Division of LMHT Associates

STATE OF GEORGIA — GLEN LEIBMANN — CERTIFICATE NO. EN-024-38

JAN. 31, 2015

HARDEE'S H24-66 PROTOTYPE
I-16 & HWY. 441 BYP.
CORNELIA, GEORGIA 30531

REVISIONS

NO	DESCRIPTION	DATE
1	CITY COMMENTS	3-10-17

DETAILS

DRAWN BY: | CHECKED BY: | CHECKED BY: | CHECKED BY: | APPROVED BY:

CKE SITE ID.:

DATE: 02/01/2017

SHEET NUMBER:

A15